TAF-L-E DIMENSIONS

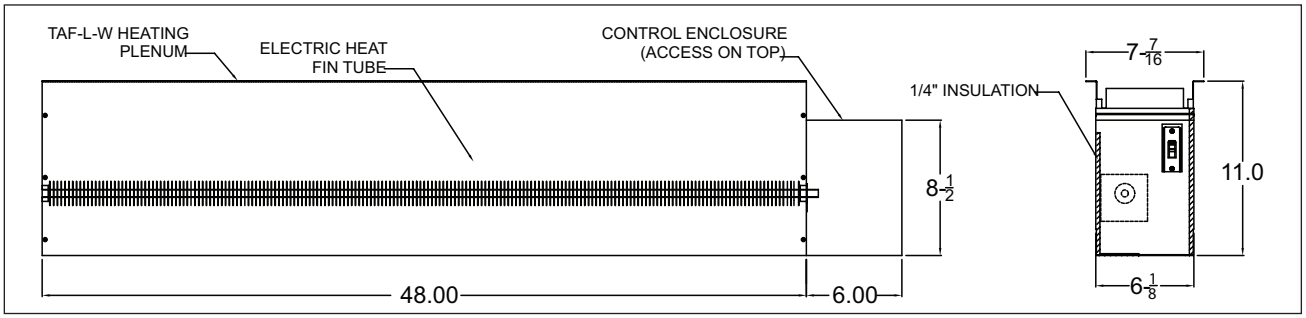

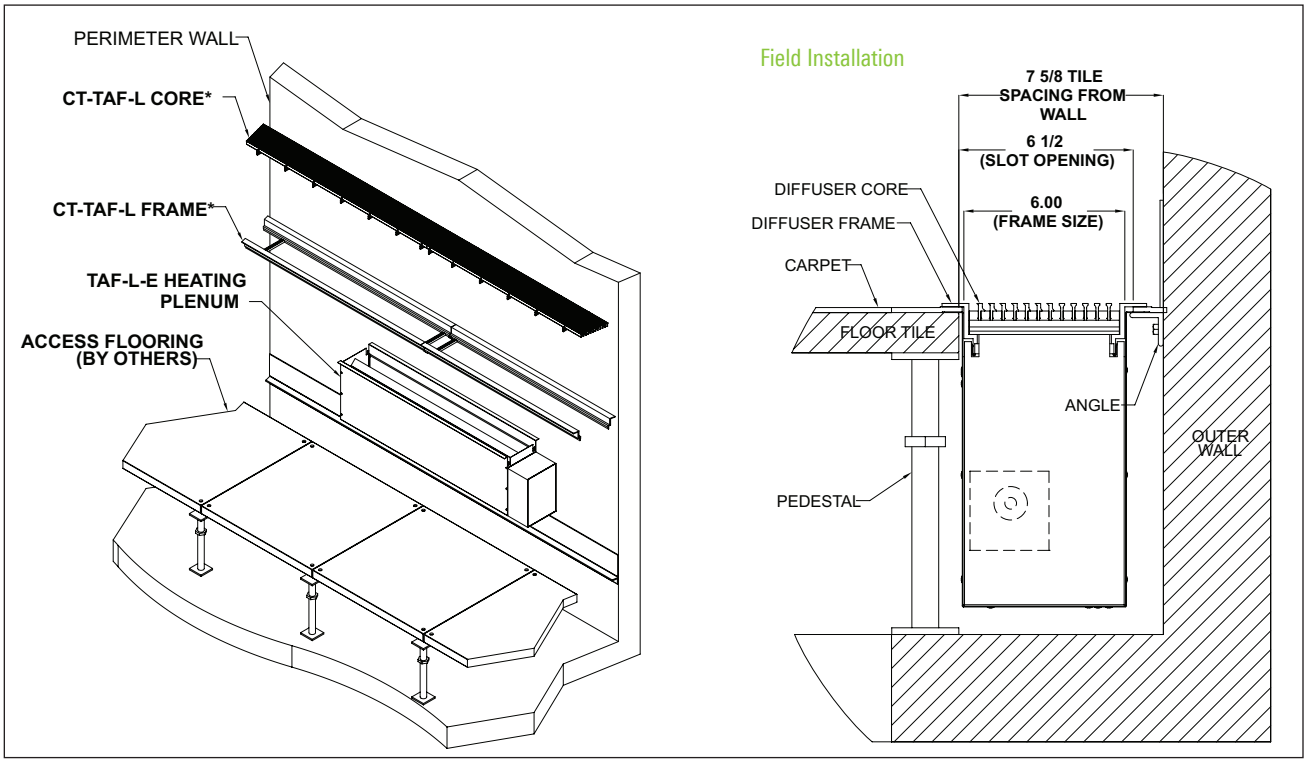

All dimensions are in inches