TBHD Arr. 1 w/Mixing Box

Model TBHD Direct Drive Blower Coil Unit Discharge ARTG. 1 w/ Mixing Box

NOTES:
1.All dimensions are Inches [millimeters].All dimensions are ±1/4" [6mm]. Metric values are soft conversion.
2.Right hand unit shown, left hand unit opposite. motor/drive location may be specified Left or Right Hand. Standard control enclosure location matches motor/drive position.
3.Provide sufficient clearance to permit access to controls and comply with applicable codes and ordinances.
4.See drawing BC-TBHD-16.0 for filter rack details.
5.Outside and return air damper linkage is optional.
6.See coil connection details drawings for coil connection sizes and locations.
7.High efficiency filter rack not available with mixing box.

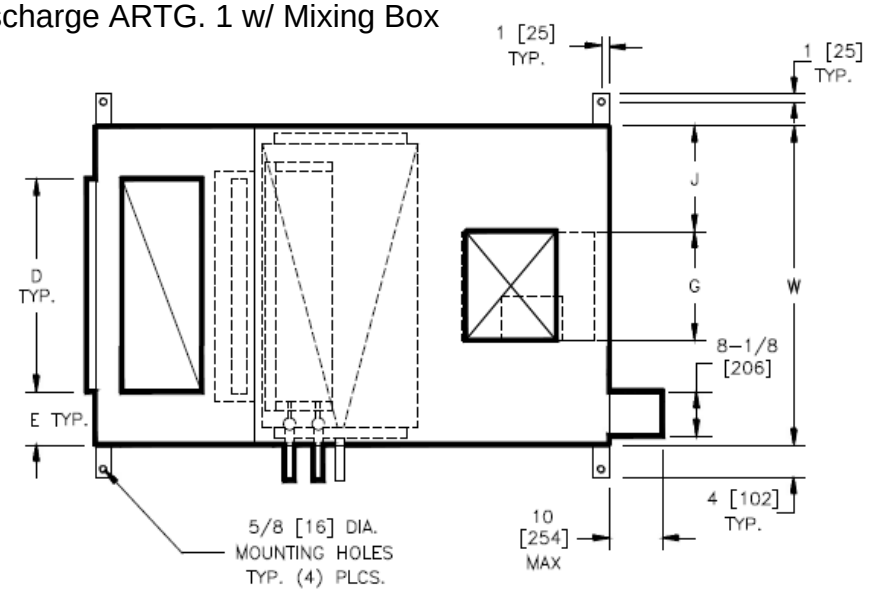

TOP VIEW

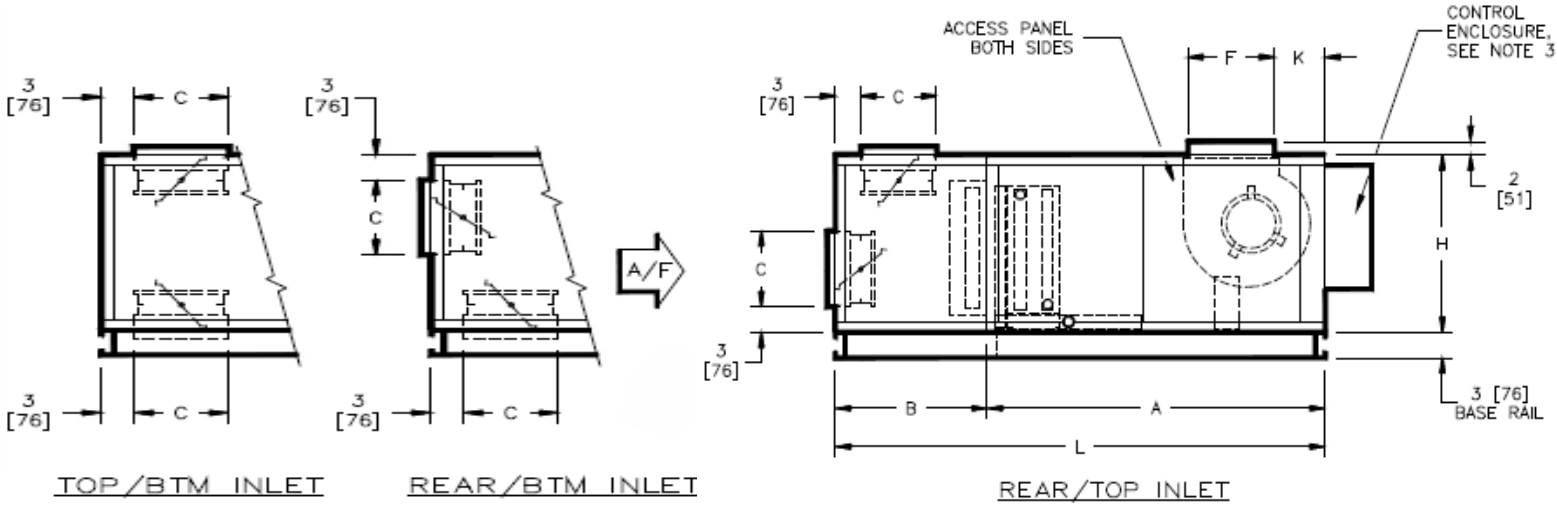

SIDE VIEW

DIMENSIONS

SIZE	FAN SIZE	L	W	H	A	B	C	D	E	F	G	J	K
8	9 X 6 [229 X 152]	58 [1473]	30 [762]	21 [533]	40 [1016]	18 [457]	9 [229]	18 [457]	6 [152]	10-3/8 [264]	8-3/8 [213]	10-7/8 [276]	7 [178]
12	9 X 6 [229 X 152]	58 [1473]	36 [914]	21 [533]	40 [1016]	18 [457]	9 [229]	24 [610]	6 [152]	10-3/8 [264]	8-3/8 [213]	13-7/8 [352]	7 [178]
16	10 X 8 [254 X 203]	58 [1473]	44 [1118]	21 [533]	40 [1016]	18 [457]	9 [229]	30 [762]	7 [178]	11-1/2 [292]	10-5/8 [270]	16-5/8 [422]	8 [203]
20	10 X 8 [254 X 203]	61 [1549]	50 [1270]	22-1/2 [572]	40 [1016]	21 [533]	12 [305]	36 [914]	7 [178]	11-1/2 [292]	10-5/8 [270]	19-5/8 [498]	8 [203]
30	10 X 8 [254 X 203]	67 [1702]	59 [1499]	30 [762]	46 [1168]	21 [533]	12 [305]	45 [1143]	7 [178]	11-1/2 [292]	10-5/8 [270]	24-1/4 [616]	10-1/4 [260]
40	10 X 8 [254 X 203]	70 [1778]	68 [1727]	30 [762]	46 [1168]	24 [610]	15 [381]	48 [1219]	10 [254]	11-1/2 [292]	10-5/8 [270]	28-5/8 [727]	10-1/4 [260]

Revision Date	Version Date	Initiated By	Description
New	08/04/22	SP	New Release

All rights reserved. No part of this work may be reproduced or transmitted in any form or by any means, electronic or mechanical, including photocopying and recording, or by any information storage retrieval system without permission in writing from Titus.