DTFS-F Fantom IQ™

Ultra Quiet Fan Powered Terminal, Series Flow
Direct Digital Control, Pressure Independent

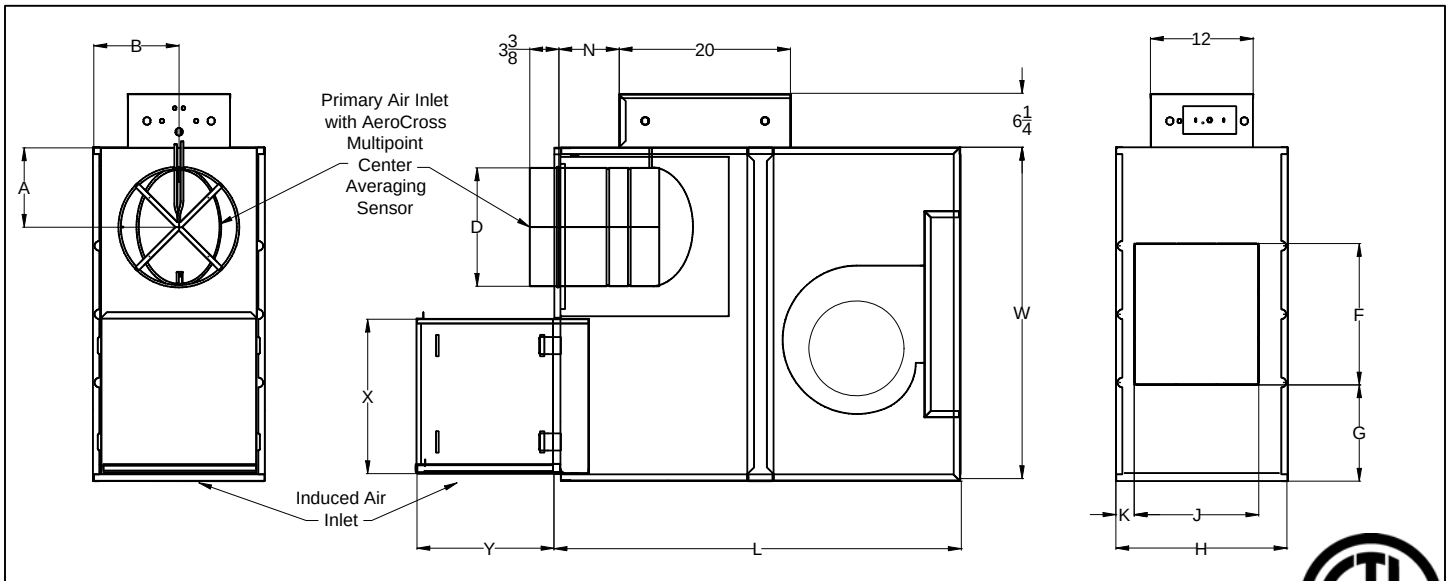

Left hand unit, top view shown. All dimensions are in inches.

Unit Size	Inlet Size	A	B	X	Y	D	Induced Air Inlet Height	Induced Air Inlet Width	F	G	H	J	K	L	N	W	Filter Size
B	6 8 10 12	6 6 7 8	8	19	13 7/8	5 7/8 7 7/8 9 7/8 11 7/8	12 5/8	8 3/4	14	11 1/2	16	11	2 1/4	43	2 7/8 2 7/8 4 7/8 4 7/8	37	11 x 14
C	6 8 10 12	6 6 7 8				5 7/8 7 7/8 9 7/8 11 7/8									2 7/8 2 7/8 4 7/8 4 7/8		
D	10 12 14 16	7 8 10 11	10	18 1/8	16 7/8	9 7/8 11 7/8 13 7/8 15 7/8	16 5/8	15 3/4	16 1/2	11 1/4	20	14 5/8	2	46 3/4	4 7/8 4 7/8 6 7/8 6 7/8	39	18 x 17
E	12 14 16	8 10 11				11 7/8 13 7/8 15 7/8									4 7/8 6 7/8 6 7/8		

Motor Amperage Ratings

Unit Size	Motor hp	120/1/60 FLA	208/240/1/60 FLA	277/1/60 FLA
B	1/6	2.3	0.9	0.8
C	1/4	4.0	1.8	1.4
D	1/3	8.5	3.6	3.0
E	3/4	8.6	4.2	4.5

FLA = Full Load Amperage, as tested in accordance with UL 1995

All fan motors are single phase, same voltage as electric coil (when supplied), with exception that 277V motors are used with 480V, 3 phase coils (4 wire wye).

Accessories (Optional)

Check ☑ if provided.

- ☐ Induced Air Filter, 1" thick, disposable construction type.
- ☐ Fan disconnect switch (not available on units with optional electric coils.)
- ☐ Fibre Free Liner
- ☐ SteriLoc Liner
- ☐ ½" EcoShield Liner
- ☐ ½" EcoShield Liner (Foil Face)
- ☐ ½" Fibre Free Liner
- ☐ Fan unit fusing
- ☐ Cam Latch for Access Door
- ☐ _____
- ☐ 1" Fiberglass Liner
- ☐ 1" EcoShield Liner
- ☐ 1" EcoShield Liner (Foil Face)
- ☐ 1" Fibre Free Liner
- ☐ Hanger Brackets

Accessories (Optional)

☐ Hot Water Coil Section

- 1/2" copper tubes
- Aluminum ripple fins, 10 per inch
- Connections: Male solder, 5/8" for both 1-row and 2-row. Left hand or right hand connections.
- Galvanized steel casing
- Flanged duct connection.
- Coil is installed on discharge of unit.

☐ 1 Row

☐ 2 Row

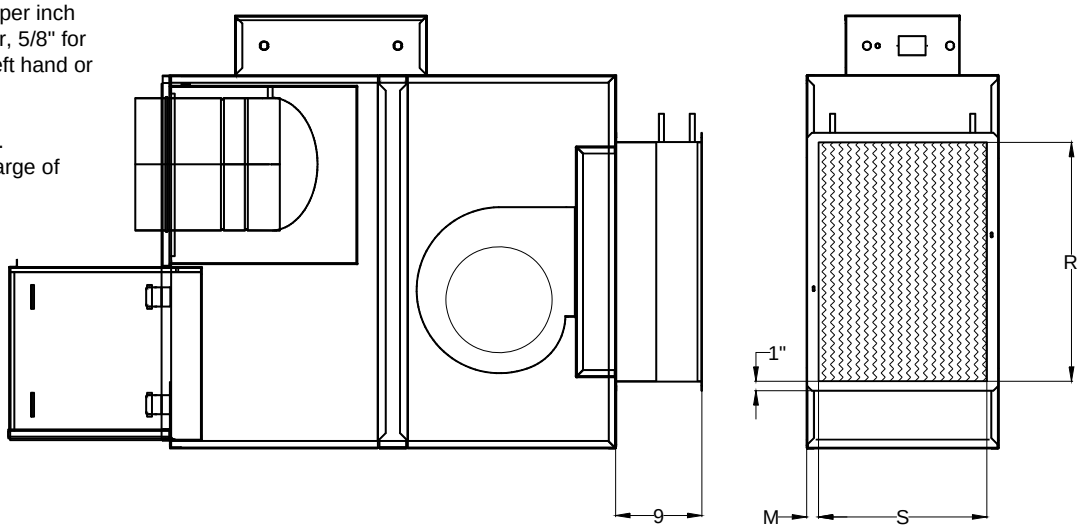

Unit Size	M (1 row)	M (2 row)	R	S
B,C	1	1	20 1/2	12 1/2
D,E	1	1 1/4	25	17 1/2

R and S are inside dimensions.

☐ Electric Coil Section ☐ Optional Lynergy Controlled Electric Heater

Standard Features

- Single side access to low voltage, high voltage, and electric heater controls.
- Automatic reset thermal cutouts, one per element
- Single point electrical connection for entire unit
- Positive pressure flow switch
- Flanged duct connection
- Coil is installed at discharge of unit.
- Transformer

Options

☐ Fuse Block

☐ Disconnect switch, door interlock type

☐ Manual reset cutout

☐ Dust tight construction

☐ Mercury contactors

Supply Voltage

☐ 208V, 1 ph, 60Hz

☐ 240V, 1 ph, 60Hz

☐ 277V, 1 ph, 60Hz

☐ 208V, 3 ph, 60Hz

☐ 480V, 3 ph, 60Hz (4 wire wye only)

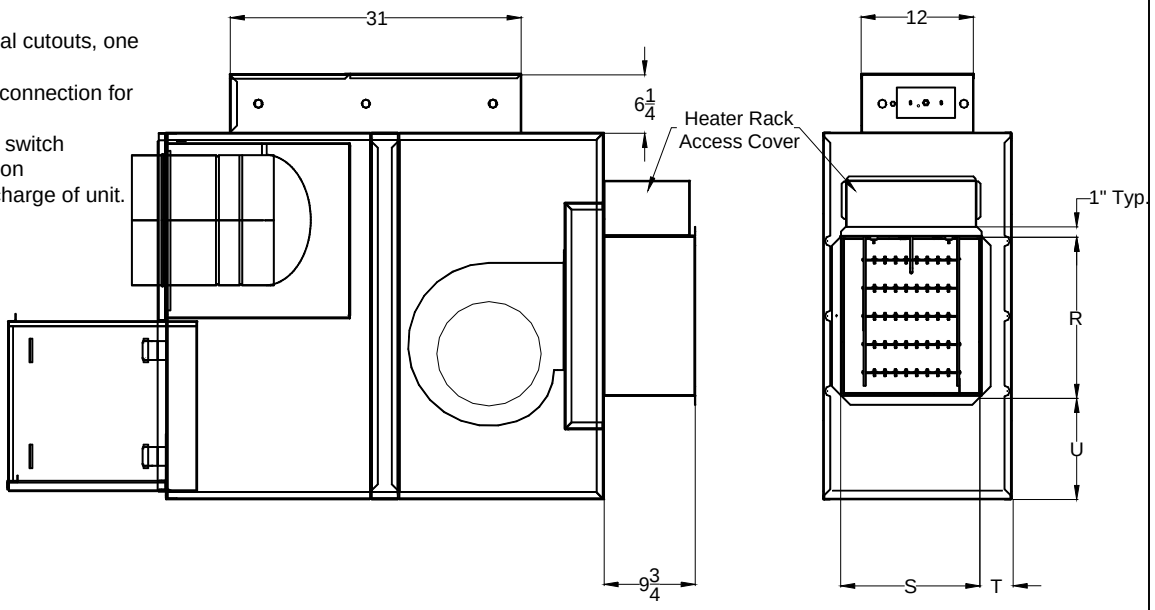

Unit Size	U	R	S	T
B,C	11 3/8	14 1/2	11 1/2	2 3/8
D,E	11	17	15	3 1/8

R and S are inside dimensions.

Accessories (Optional)

Hanger Bracket Location

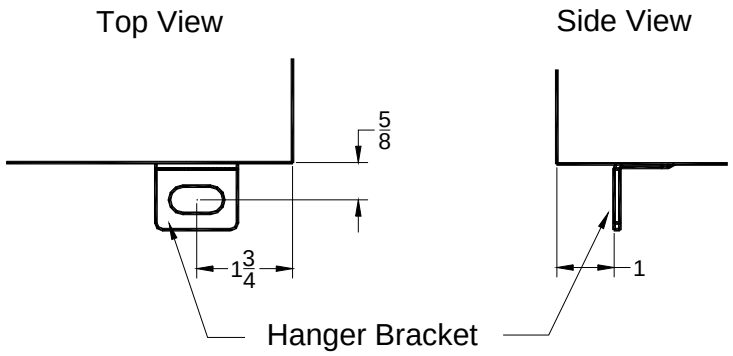

General Description

- Heavy steel casing, with leak resistant construction.
- Dual density insulation, coated to prevent air erosion, meet requirements of NFPA 90A and UL 181.
- Energy efficient fan motor, permanent split capacitor type, mounted in vibration isolators.
- Adjustable SCR fan speed control with minimum voltage stop.
- Patent-pending FAST™ attenuator system that greatly reduces radiated sound power levels. The FAST™ attenuator ships assembled inside the casing, pulls out easily and snaps into place for operation.
- Top and bottom access panels can be removed for service.
- Multipoint, center averaging velocity sensor.
- Primary air flow balancing connections.
- Pressure independent primary flow control.
- Single point electrical connections.
- Rectangular discharge opening is designed for flanged duct connections.

This submittal is meant to demonstrate general dimensions of this product. The drawings are not meant to detail every aspect of the product. Drawings are not to scale. Titus reserves the right to make changes without written notice.

All rights reserved. No part of this work may be reproduced or transmitted in any form or by any means, electronic or mechanical, including photocopying and recording, or by any information storage retrieval system without permission in writing from Air Distribution Technologies, Inc.