FAN POWERED
ECM (REMOTE) - STAGED HEAT

CONTROL NUMBER
AU80

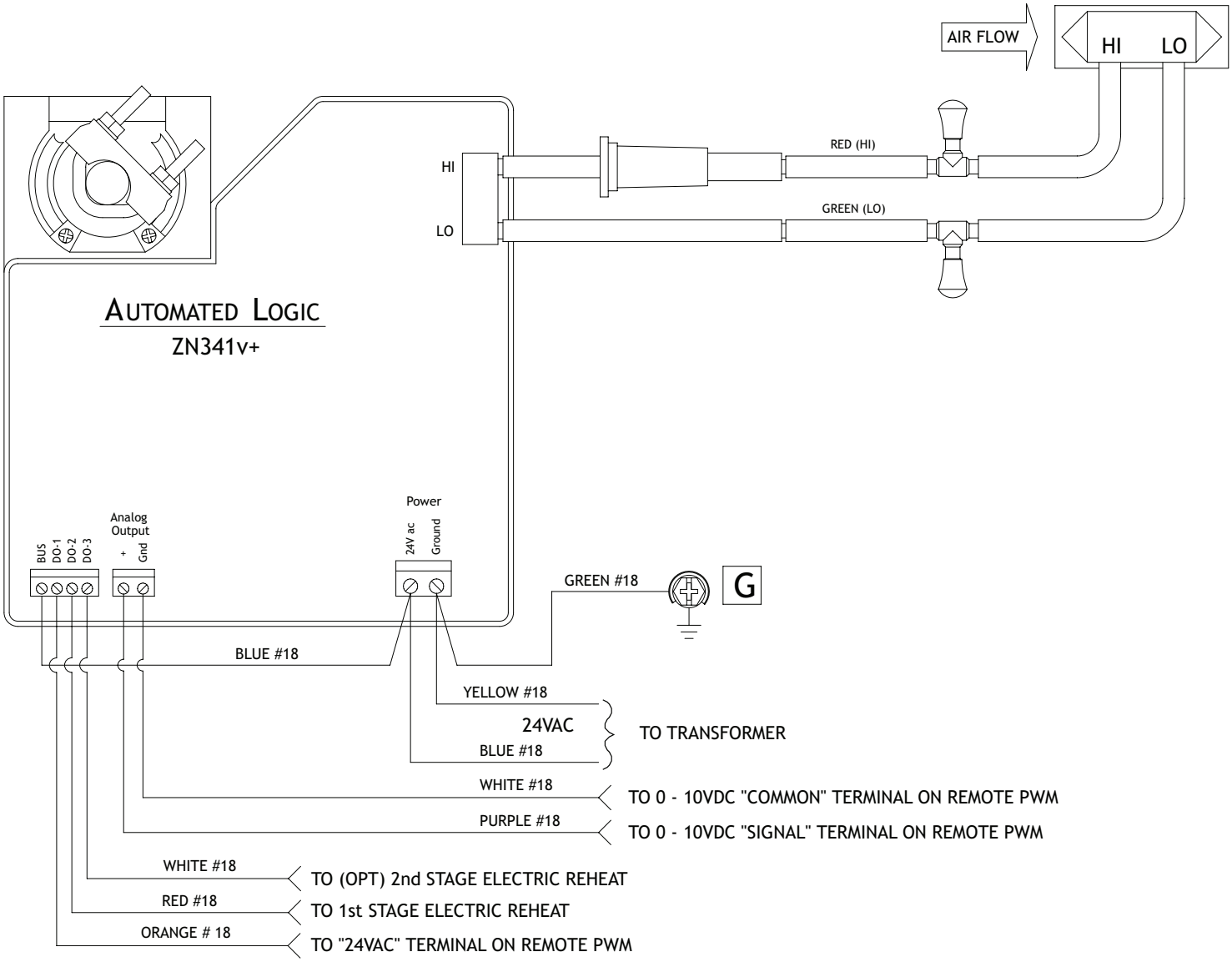

ACTUATOR NOTE: PRIOR TO LINKING DAMPER DEPRESS CLUTCH RELEASE BUTTON AND ROTATE ACTUATOR COLLAR FULLY CLOCKWISE. LINK DAMPER OPEN. MOTOR TURNS COUNTER CLOCKWISE TO CLOSE.

PROJECT:	DATE:
ENGINEER:	
CUSTOMER:	SPEC. SYM.: