FAN POWERED
ECM (REMOTE) - 2 STAGE HEAT, BINARY, 3 POINT FLOATING

CONTROL NUMBER
JN90

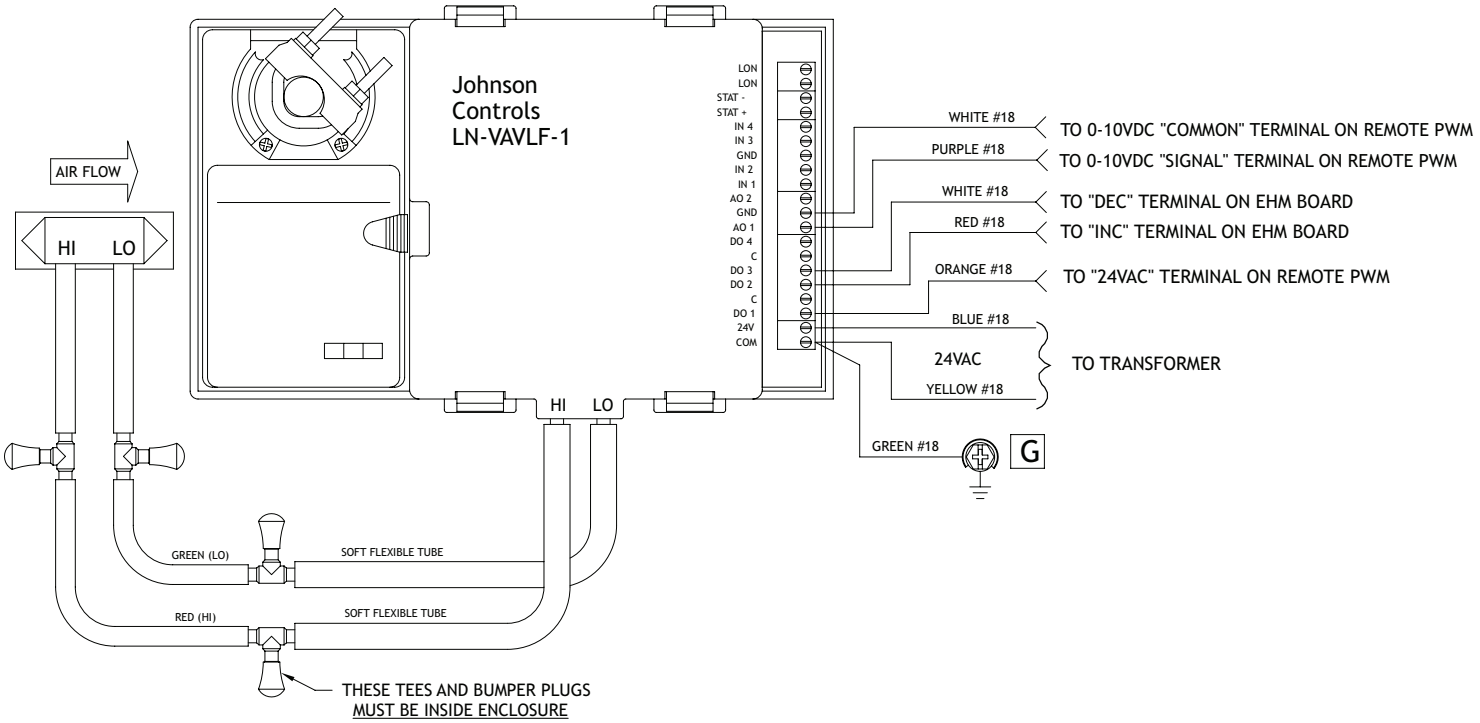

ACTUATOR NOTE: PRIOR TO LINKING DAMPER DEPRESS CLUTCH RELEASE BUTTON AND ROTATE ACTUATOR COLLAR FULLY CLOCKWISE. LINK DAMPER OPEN. MOTOR TURNS COUNTER CLOCKWISE TO CLOSE.

PROJECT:	DATE:
ENGINEER:	SPEC. SYM.:
CUSTOMER:	