TAF-L-V DIMENSIONS

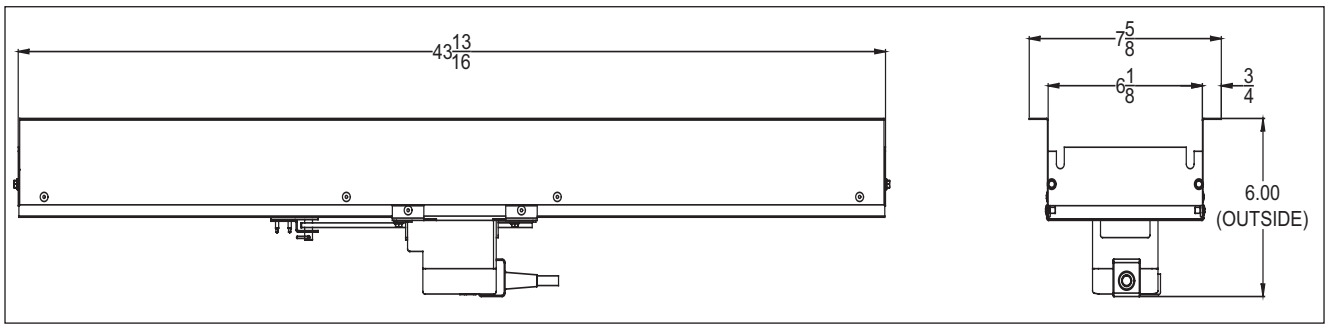

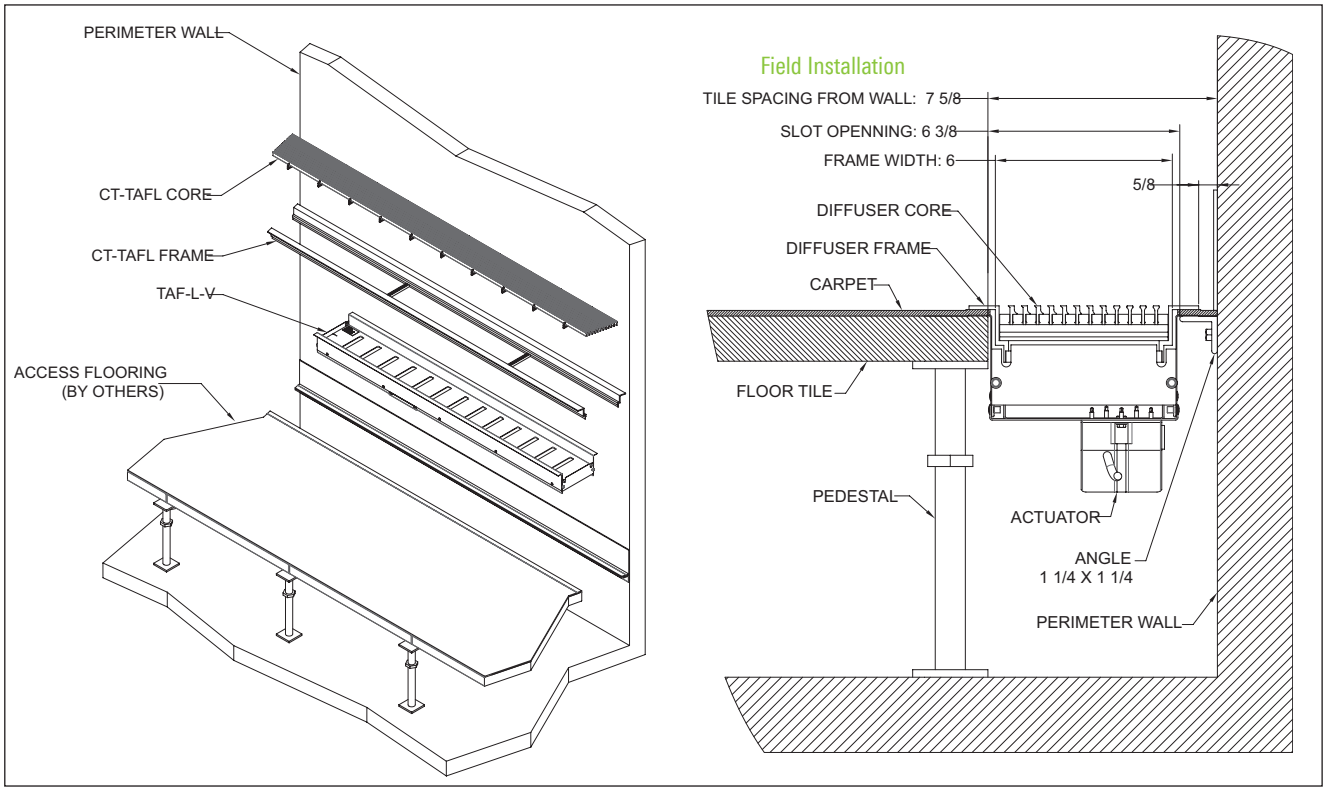

All dimensions are in inches